Technical data sheet

Product features

Infrared heat lamp for UH 12 electric 230 V / 1N		
Model	**SAP Code**	00001558
IL 1	**A group of articles - web**	Fryers and French Fries Holders



SAP Code	00001558	**Net Weight [kg]**	2.00
Net Width [mm]	270	**Power electric [kW]**	0.500
Net Depth [mm]	329	**Loading**	230 V / 1N - 50 Hz
Net Height [mm]	527		

RM GASTRO, s.r.o.,
Třída Čs. armády 816,
391 81 Veselí nad Lužnicí 1, ID:49825062

Technical data sheet

Technical drawing

Infrared heat lamp for UH 12 electric 230 V / 1N		
Model	**SAP Code**	00001558
IL 1	**A group of articles - web**	Fryers and French Fries Holders

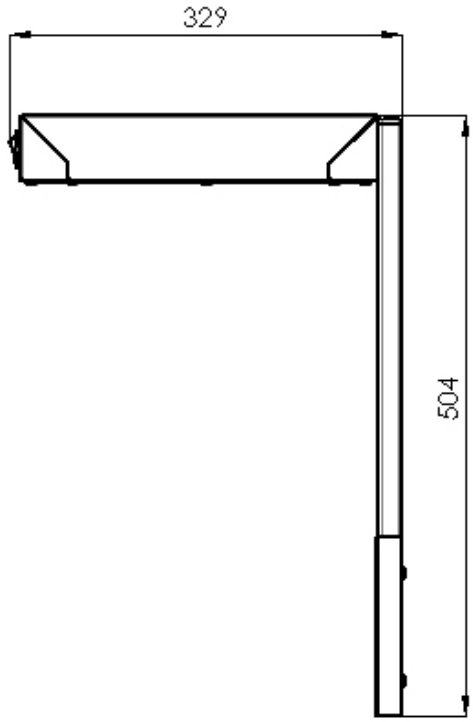

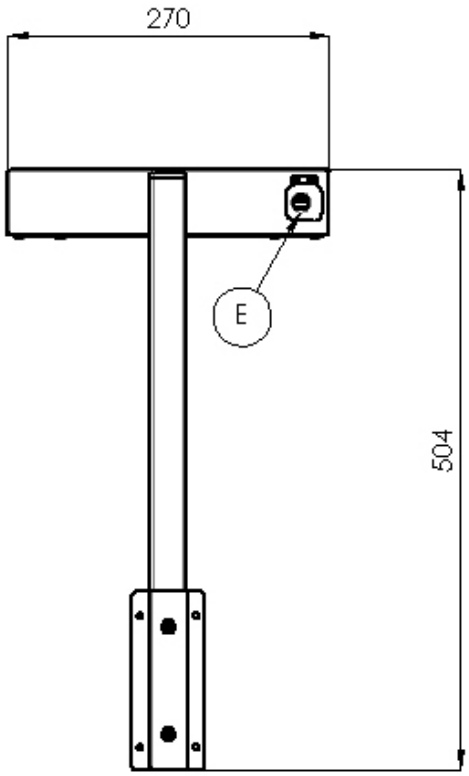

RM GASTRO, s.r.o.,
Třída Čs. armády 816,
391 81 Veselí nad Lužnicí 1, ID:49825062

Technical data sheet

Technical parameters

Infrared heat lamp for UH 12 electric 230 V / 1N		
Model	**SAP Code**	00001558
IL 1	**A group of articles - web**	Fryers and French Fries Holders

1. **SAP Code:**
   00001558
2. **Net Width [mm]:**
   270
3. **Net Depth [mm]:**
   329
4. **Net Height [mm]:**
   527
5. **Net Weight [kg]:**
   2.00
6. **Gross Width [mm]:**
   470
7. **Gross depth [mm]:**
   435
8. **Gross Height [mm]:**
   230
9. **Gross Weight [kg]:**
   3.00
10. **Device type:**
    Neutral unit
11. **Power electric [kW]:**
    0.500
12. **Loading:**
    230 V / 1N - 50 Hz

RM GASTRO, s.r.o.,
Třída Čs. armády 816,
391 81 Veselí nad Lužnicí 1, ID:49825062